179093-6 ✔ ACTIVE

AMP | Multilock Connector System

TE Internal #: 179093-6

Housing for Female Terminals, Wire-to-Device / Wire-to-Board, 16 Position, .15 in [3.8 mm] Centerline, Gray, Signal, Multilock Connector System

View on TE.com >

Connectors > Automotive Connectors > Connector Housings > MULTILOCK, CONNECTOR HOUSING

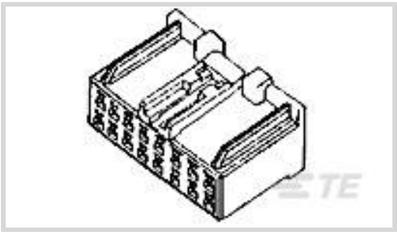

Connector & Housing Type: **Housing for Female Terminals**

Mating Tab Width: **1 mm, 1.8 mm [.039 in, .071 in]**

Connector System: **Wire-to-Board, Wire-to-Device**

Number of Positions: **16**

Centerline (Pitch): **3.8 mm [.15 in]**

All MULTILOCK, CONNECTOR HOUSING (573)

Features

Product Type Features

Connector Shape	Rectangular
Connector & Housing Type	Housing for Female Terminals
Connector System	Wire-to-Board, Wire-to-Device
Sealable	No
Hybrid Connector	No
Primary Locking Feature	Integrated in Housing

Configuration Features

Number of Positions	16
Number of Rows	2

Electrical Characteristics

Operating Voltage	12 VDC
Nominal Voltage Architecture	12 V

Body Features

Cable Exit Angle	180°
Body Material	PBT
Primary Product Color	Gray

Contact Features

Contact Size	1.8mm
Contact Type	Receptacle
Mating Tab Width	1 mm, 1.8 mm[.039 in][.071 in]

Mechanical Attachment

Mounting Feature	Without
Terminal Position Assurance	Yes
Strain Relief	Without
Mating Alignment Type	Polarized
Mating Alignment	With
Connector Mounting Type	Cable Mount (Free-Hanging)

Housing Features

Centerline (Pitch)	3.8 mm[.15 in]

Dimensions

Product Width	31.1 mm[1.224 in]
Product Length	21 mm[.827 in]
Product Height	17.2 mm[.677 in]
Row-to-Row Spacing	2.54 mm[.1 in]

Usage Conditions

Operating Temperature (Max)	70 °C, 75 °C, 80 °C, 85 °C, 90 °C, 100 °C, 105 °C, 110 °C, 120 °C[158 °F][167 °F][176 °F][185 °F][194 °F][212 °F][221 °F][230 °F][248 °F]
Operating Temperature Range	-40 – 120 °C[-40 – 248 °F]

Operation/Application

Circuit Application	Signal

Industry Standards

UL Flammability Rating	UL 94HB

Packaging Features

Packaging Quantity	100
Packaging Method	Bag

Other

Serviceable	Yes

Connector Position Assurance Capable	No

Product Compliance

For compliance documentation, visit the product page on TE.com>

EU RoHS Directive 2011/65/EU	Compliant
EU ELV Directive 2000/53/EC	Compliant
China RoHS 2 Directive MIIT Order No 32, 2016	No Restricted Materials Above Threshold
EU REACH Regulation (EC) No. 1907/2006	Current ECHA Candidate List: JUNE 2022 (224) Candidate List Declared Against: JUNE 2022 (224) Does not contain REACH SVHC
Halogen Content	Low Halogen - Br, Cl, F, I < 900 ppm per homogenous material. Also BFR/CFR/PVC Free
Solder Process Capability	Not applicable for solder process capability

Product Compliance Disclaimer

This information is provided based on reasonable inquiry of our suppliers and represents our current actual knowledge based on the information they provided. This information is subject to change. The part numbers that TE has identified as EU RoHS compliant have a maximum concentration of 0.1% by weight in homogenous materials for lead, hexavalent chromium, mercury, PBB, PBDE, DBP, BBP, DEHP, DIBP, and 0.01% for cadmium, or qualify for an exemption to these limits as defined in the Annexes of Directive 2011/65/EU (RoHS2). Finished electrical and electronic equipment products will be CE marked as required by Directive 2011/65/EU. Components may not be CE marked. Additionally, the part numbers that TE has identified as EU ELV compliant have a maximum concentration of 0.1% by weight in homogenous materials for lead, hexavalent chromium, and mercury, and 0.01% for cadmium, or qualify for an exemption to these limits as defined in the Annexes of Directive 2000/53/EC (ELV). Regarding the REACH Regulation, the information TE provides on SVHC in articles for this part number is based on the latest European Chemicals Agency (ECHA) 'Guidance on requirements for substances in articles' posted at this URL: https://echa.europa.eu/guidance-documents/guidance-on-reach

Compatible Parts

TE Part # CAT-M9194-T273
MULTILOCK, RECEPTACLE AND TAB

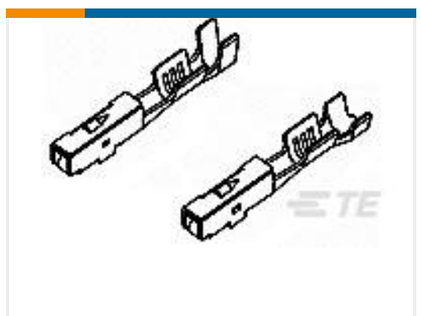

TE Part # 179425-1
070-2 REC CONTACT M L/P 20-16

Also in the Series | Multilock Connector System

Automotive Connector Caps & Covers (16)

Automotive Connector EMC Shielding (1)

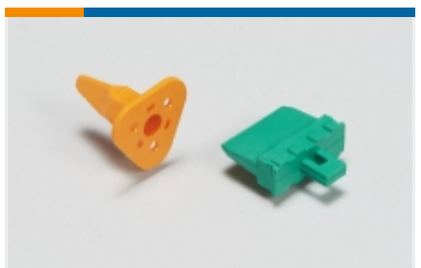

Automotive Connector Locks & Position Assurance(2)

Automotive Housings(572)

Automotive Seals & Cavity Plugs(2)

Automotive Terminals(140)

Insertion & Extraction Tools(6)

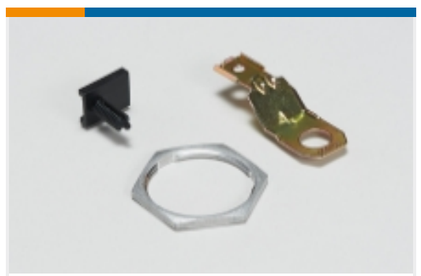

Other Automotive Connector Accessories(9)

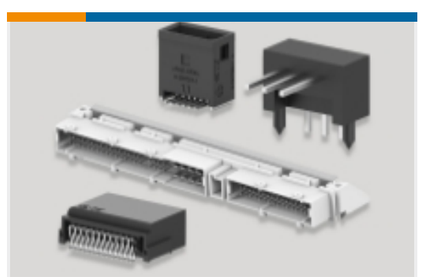

PCB Headers & Receptacles(127)

Documents

Product Drawings

040/070 MK-2 PLUG ASSY 16P

English

CAD Files

Customer View Model

ENG_CVM_179093-6_A.3d_igs.zip

English

Customer View Model

ENG_CVM_179093-6_A.3d_stp.zip

English

Customer View Model

ENG_CVM_179093-6_A.2d_dxf.zip

English

3D PDF

English

By downloading the CAD file I accept and agree to the Terms and Conditions of use.

Datasheets & Catalog Pages

MULTILOCK Connector System

English

Product Specifications

040II/070II Multi Lock Connector MK-II Type

Japanese

Product Specification

Japanese